TECEneo – 9700207

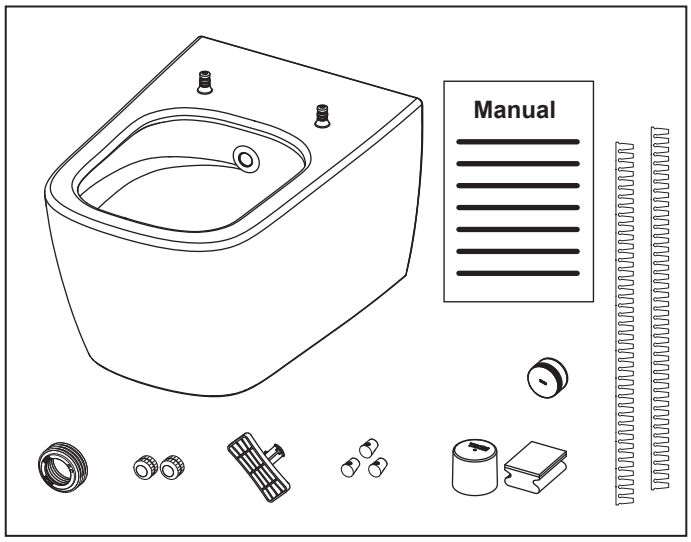

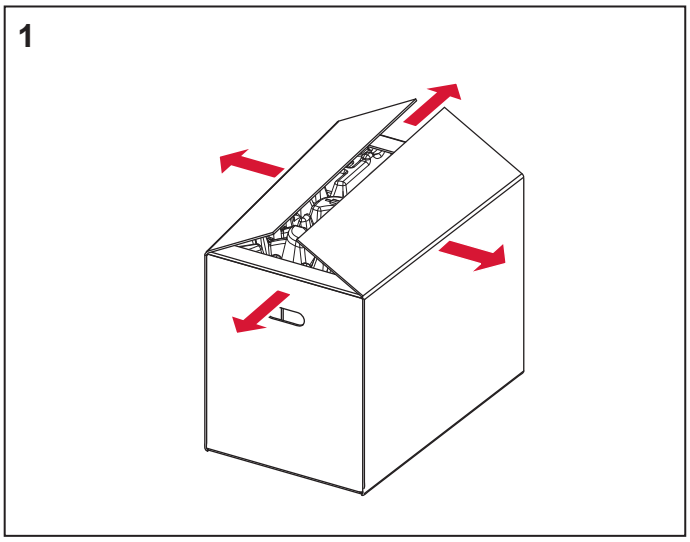

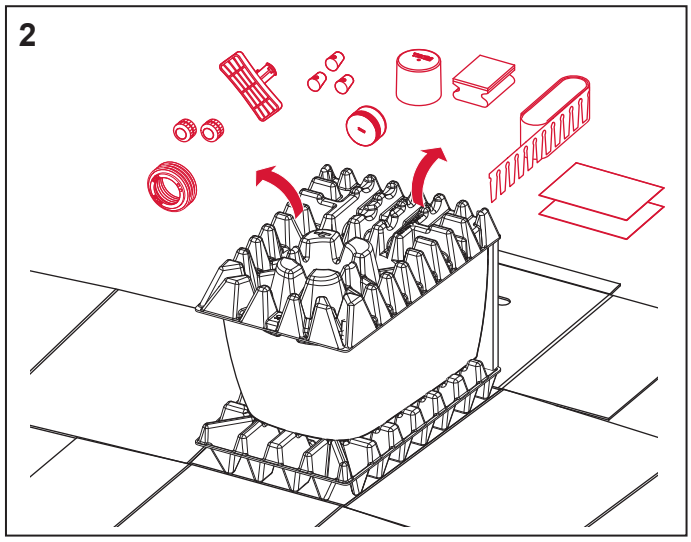

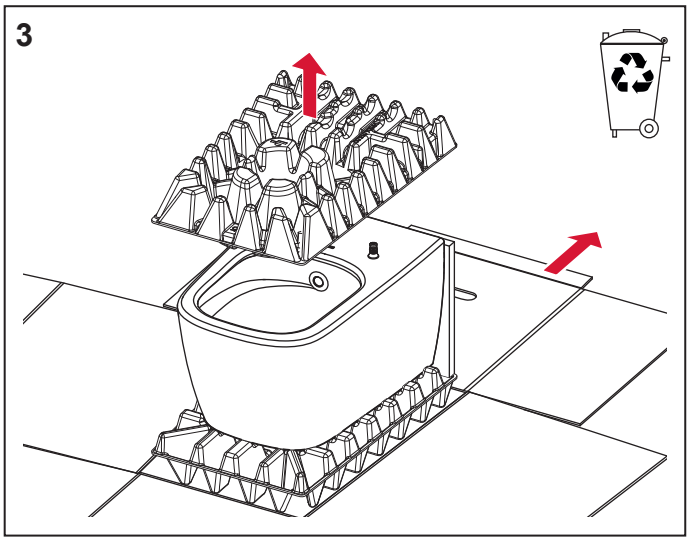

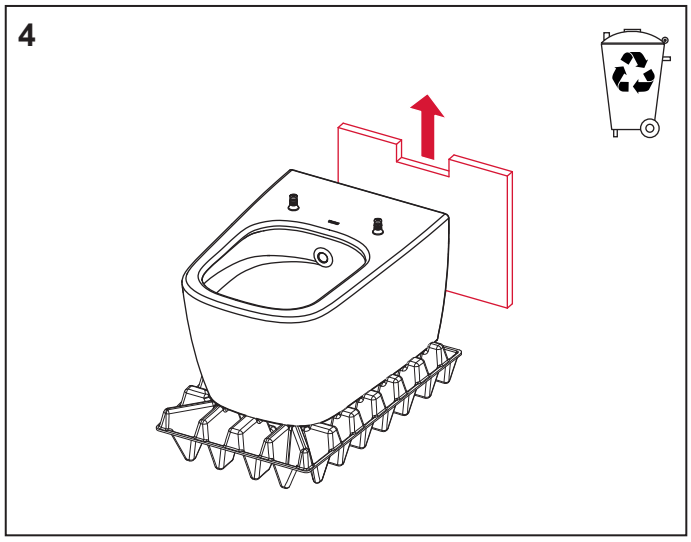

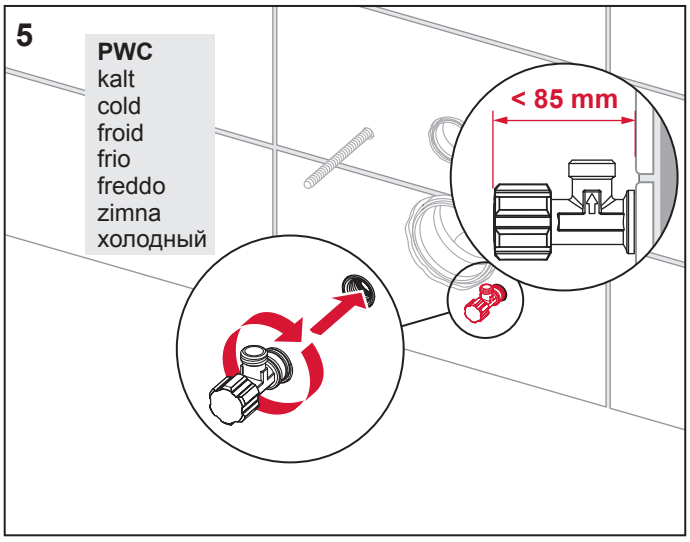

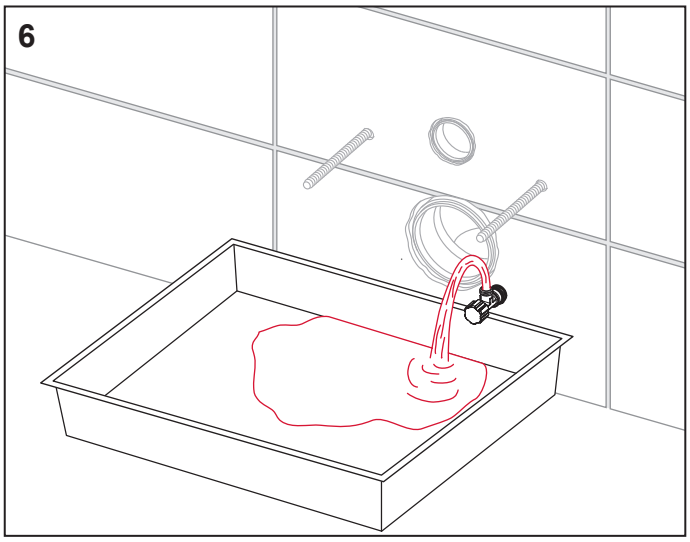
6

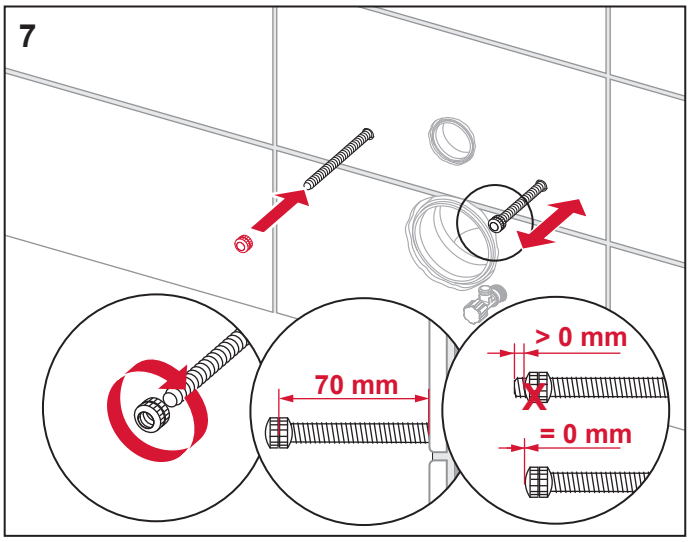
7
70 mm
> 0 mm
= 0 mm

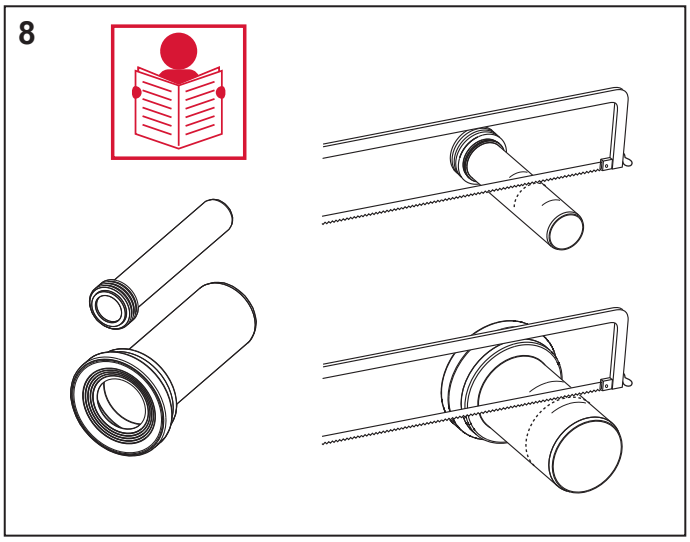
8

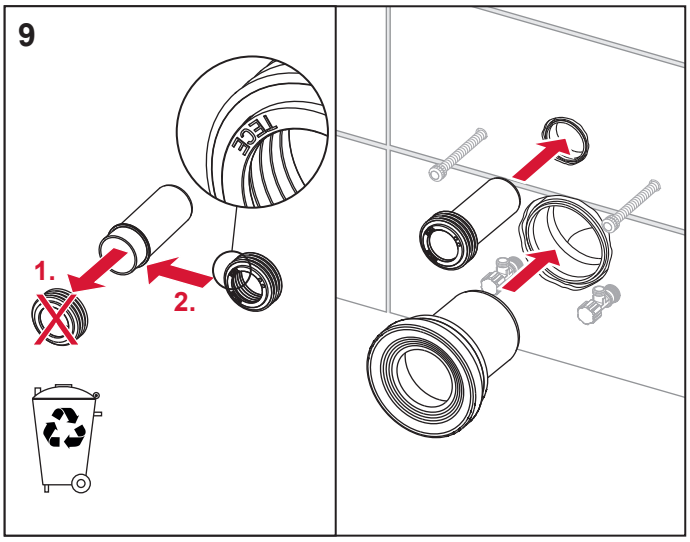
9
1.
2.

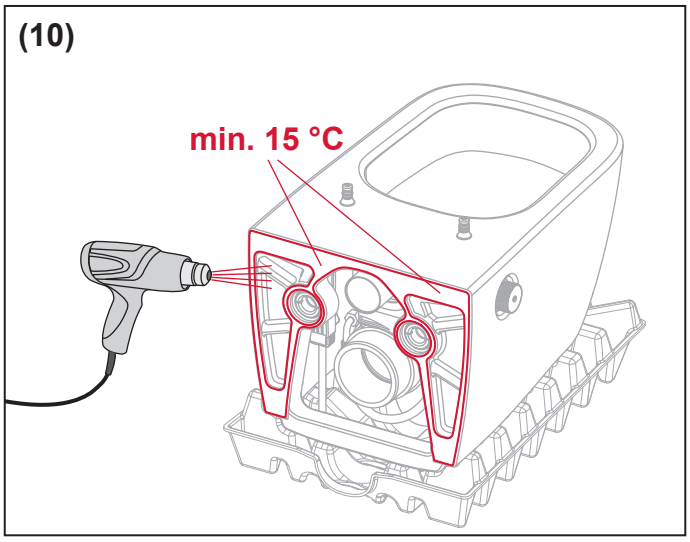
(10)
min. 15 °C

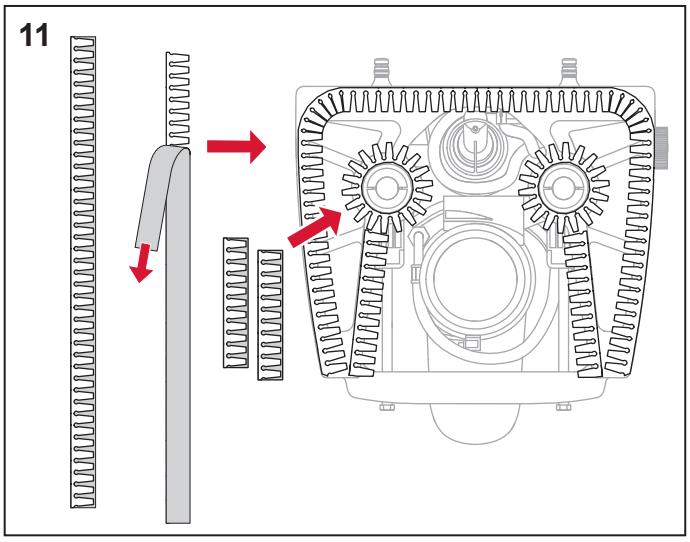
11

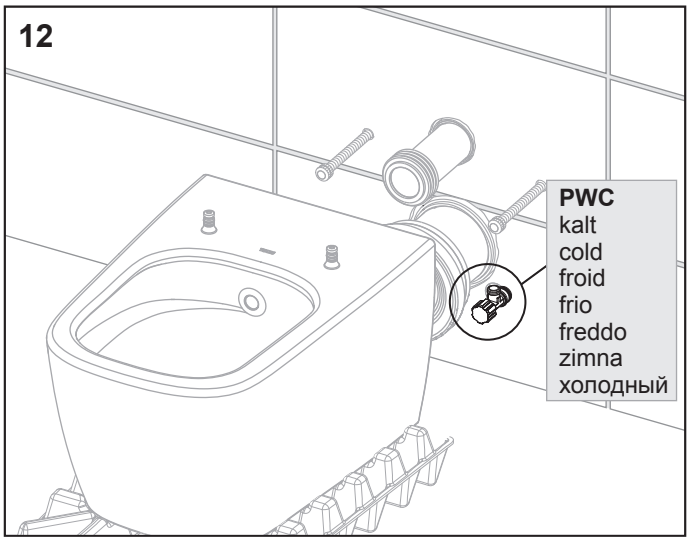
12
PWC
kalt
cold
froid
frio
freddo
zimna
холодный

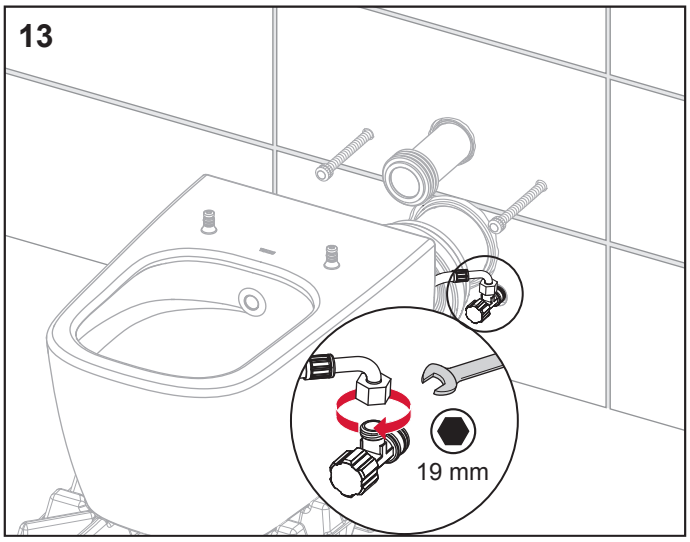
13
19 mm

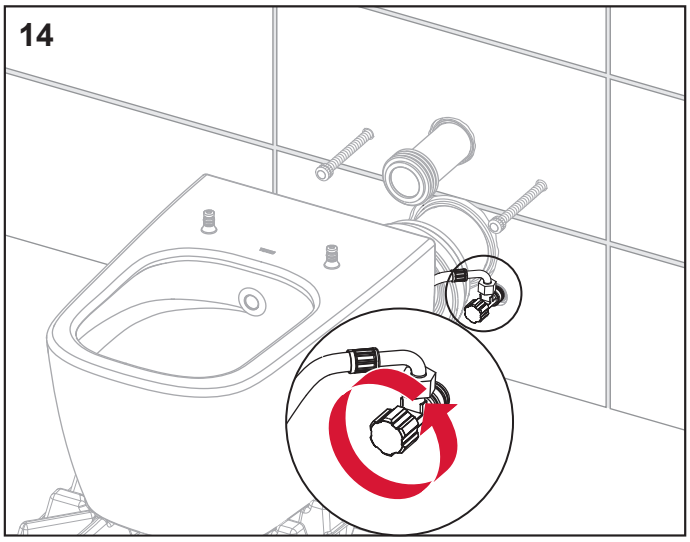
14

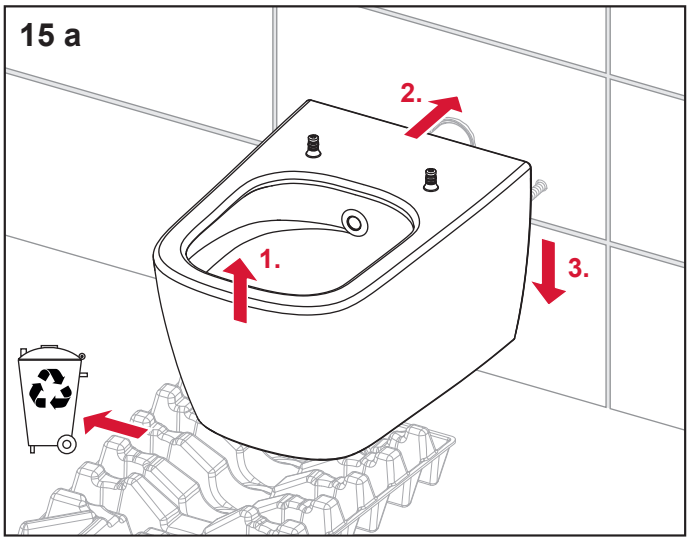
15 a
1.
2.
3.

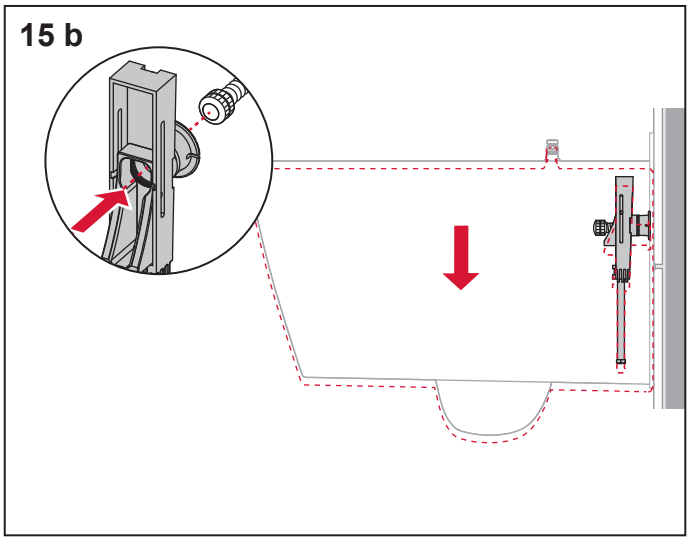
15 b

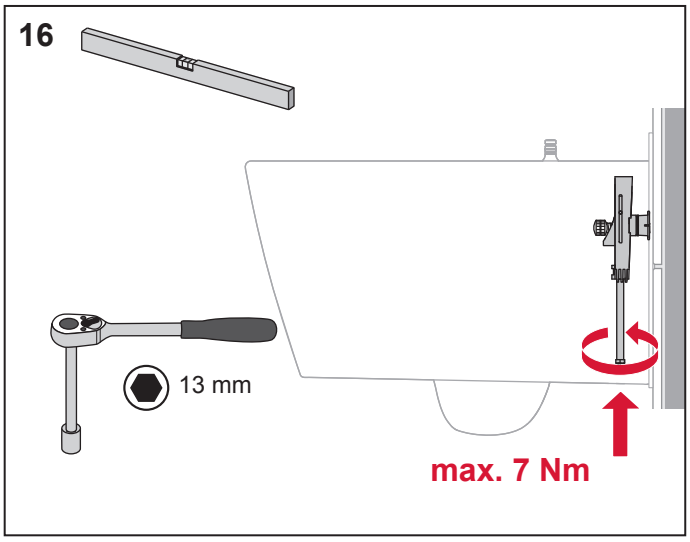
16
13 mm
max. 7 Nm

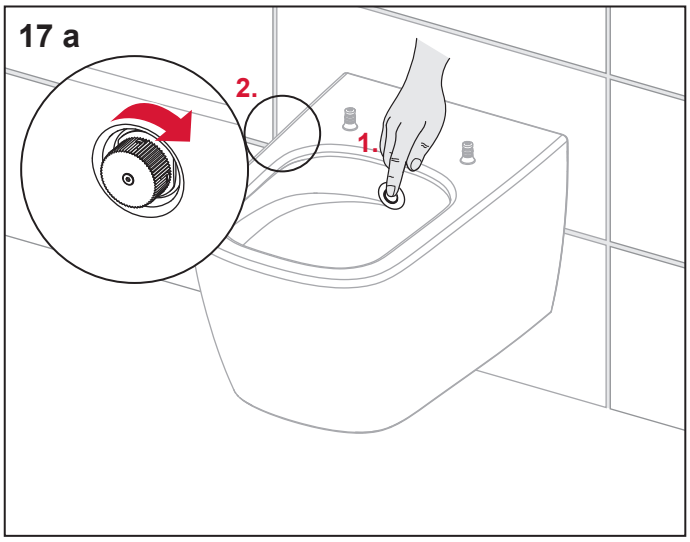

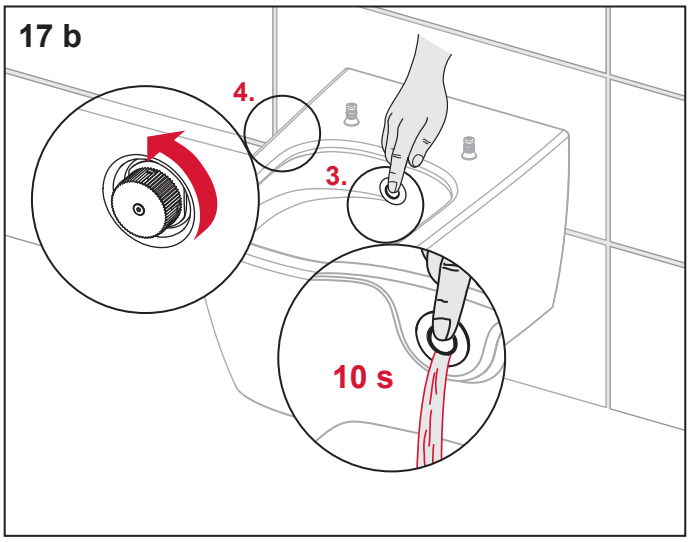

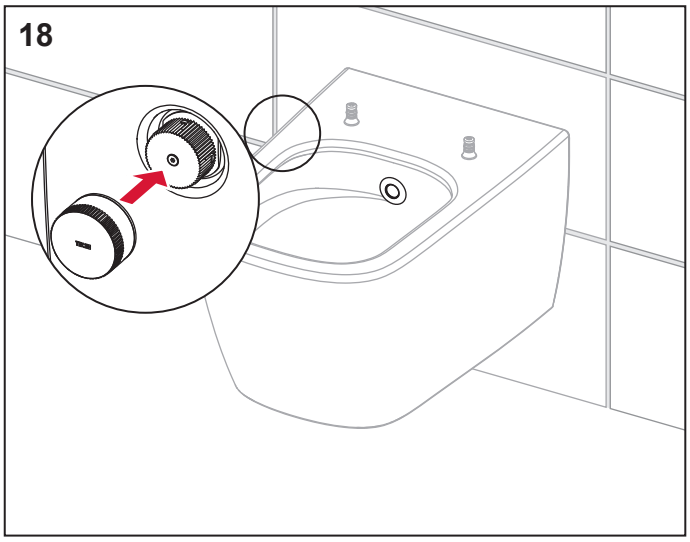

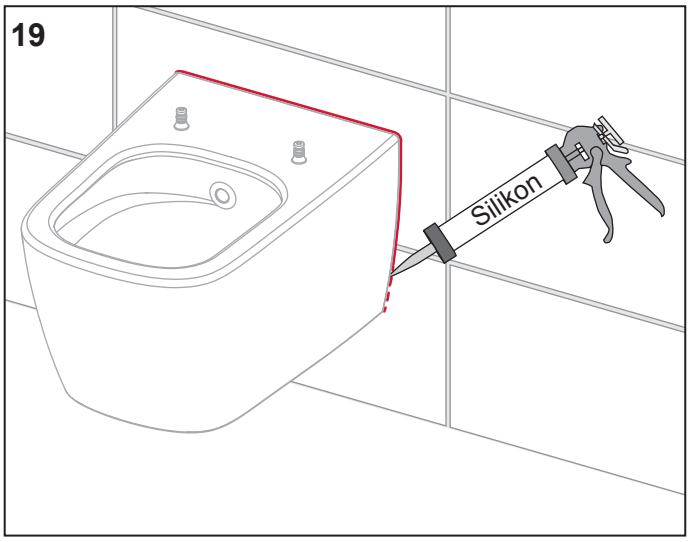

DW430 022 08 a